MXYx 4 axes / ZRFH

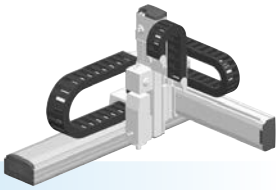

Arm type | Cable carrier | Z-axis: clamped table / moving base type (200W)+R-axis

Ordering method

MXYx - C - [ ] - [ ] - [ ] - ZRFH - [ ] - [ ] - RCX340-4 - [ ] - [ ] - [ ] - [ ] - [ ] - [ ] - [ ]

Model	Cable	Combination	X-axis stroke	Y-axis stroke	ZR-axis	Z-axis stroke	Cable	Controller / Number of controllable axes	Safety standard	Option A (OP.A)	Option B (OP.B)	Option C (OP.C)	Option D (OP.D)	Option E (OP.E)	Absolute battery
		A1 A2 A3 A4	25 to 125cm	15 to 65cm		15 to 35cm	3L: 3.5m 5L: 5m 10L: 10m								

Specify various controller setting items. RCX340 ▶ P.678

Specification

	X-axis	Y-axis	Z-axis	R-axis
Axis construction Note 1	F17	F14H	F10H-BK	R5
AC servo motor output (W)	400	200	200	50
Repeatability Note 2 (XYZ: mm)(R: °)	+/-0.01	+/-0.01	+/-0.01	+/-0.0083
Drive system	Ball screw ϕ20	Ball screw ϕ15	Ball screw ϕ15	Harmonic gear
Ball screw lead Note 3 (Deceleration ratio) (mm)	20	20	10	(1/50)
Maximum speed Note 4 (XYZ: mm/sec) (R: °/sec)	1200	1200	600	360
Moving range (XYZ: mm)(R: °)	250 to 1250	150 to 650	150 to 350	360
Robot cable length (m)	Standard: 3.5 Option: 5,10			

Note. The standard types are ZRFH with higher rigidity as compared with ZRF types which are conventional standard types. When you need the ZRF type, please consult YAMAHA.
Note 1. Use caution that the flame machining (installation holes, tap holes) differs from single-axis robots'.
Note 2. Positioning repeatability in one direction.
Note 3. Leads not listed in the catalog are also available. Contact us for details.
Note 4. When the X-axis stroke is longer than 850mm, resonance of the ball screw may occur depending on the operation conditions (critical speed). In this case, reduce the speed setting on the program by referring to the maximum speeds shown in the table below.

Maximum payload (kg)

	Z stroke (mm)		
Y stroke (mm)	150	250	350
150	11	9	8
250	11	9	8
350	11	9	8
450	8	7	6
550	8	7	6
650	4	3	2

Controller

Controller	Operation method
RCX340	Programming / I/O point trace / Remote command / Operation using RS-232C communication

MXYx 4 axes / ZRFH A1

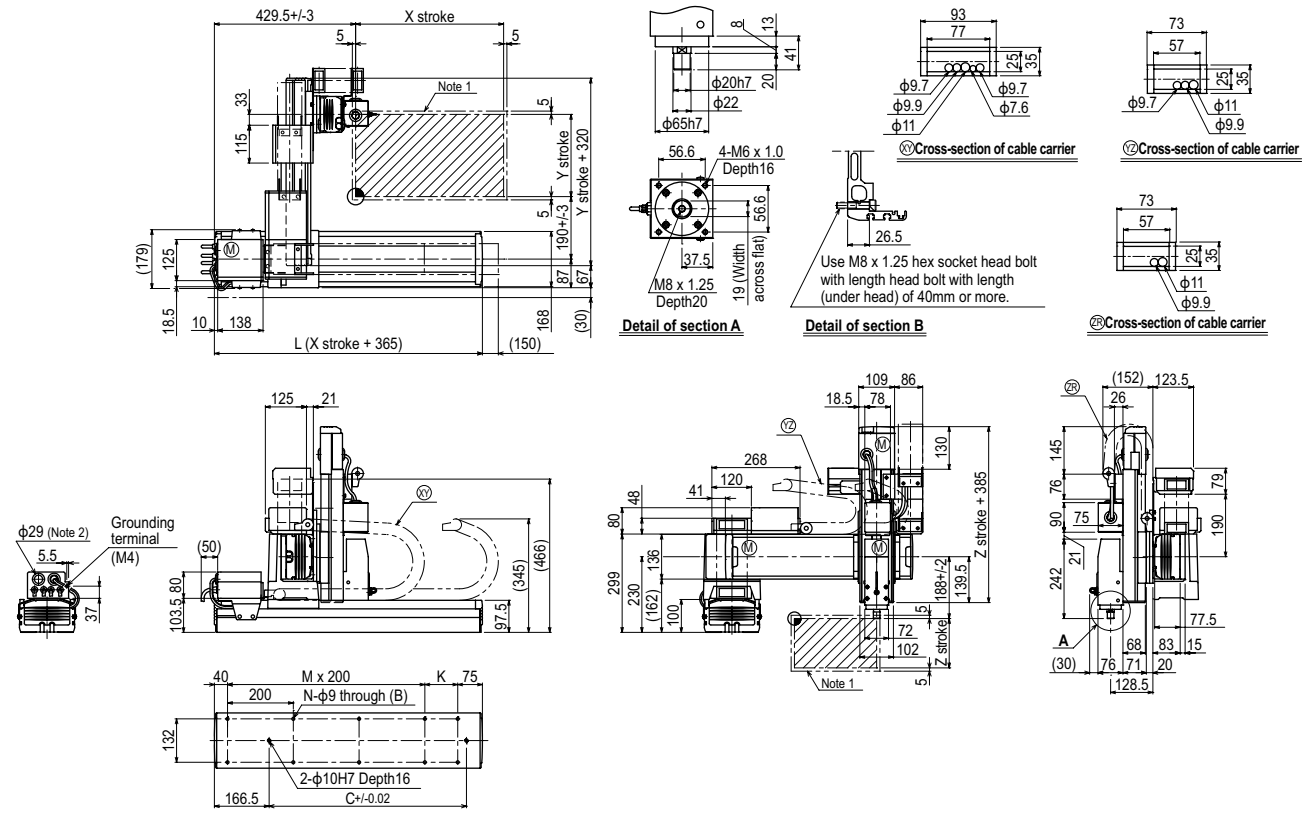

X stroke	250	350	450	550	650	750	850	950	1050	1150	1250
L	615	715	815	915	1015	1115	1215	1315	1415	1515	1615
K	100	200	100	200	100	200	100	200	100	200	100
C	240	420	600	600	780	780	960	960	1140	1140	1320
M	2	2	3	3	4	4	5	5	6	6	7
N	8	8	10	10	12	12	14	14	16	16	18

Y stroke	150	250	350	450	550	650
Z stroke	150	250	350			

Maximum speed for each stroke (mm/sec) Note 3							
X-axis	1200	960	840	720	600	480
Speed setting	–	80%	70%	60%	50%	40%

Note 1. The moving range when returning to origin and the stop position when stopping by the mechanical stopper.
Note 2. User cable extraction port.
Note 3. When the X-axis stroke is longer than 850mm, resonance of the ball screw may occur depending on the operation conditions (critical speed). In this case, reduce the speed setting on the program by referring to the maximum speeds shown in the table at the left.